KT-KD50V

vMix Control Panel

vMix | USB2.0+LAN | DB25 Tally

Features

vMix main function mapping, custom function

Compatible with vMix software via USB and LAN connections.

12-channel broadcast guide, 24 crystal buttons integrated on the panel

Can control up to 5 channels of audio volume control through the 5 integrated knobs on the body.

Audio control knob

Aluminum alloy high-quality T-BAR fader, combined with nine-level LED light progress bar, has a very directing style.

Various function shortcut keys

Support quick operation of common functions of vMix.

USB 2.0, easy connection, plug and play

Only one USB2.0 cable is needed for power supply and data transmission.

Fashionable appearance

Anodized aluminum alloy panels can be adapted to various environments.

Supports 24 channels Tally signals

Support (12 channels PGM +12 channels PVW) total 24 channels of Tally signal outputs by DB25 interface.

Specifications

Main Parameters	
Compatible Device	vMix series software
Connection Method	USB(Support power supply, LAN(POE optional)
Channel	12 channels
Volume Control	1 input + 4 output
Transition Control	Automatic transition, hard cut, T-Bar
Transition Effects	Support
Status Light	Support
Display Screen	Support
Tally	12-channel PGM+12-channel PVW
Power Supply	
Input Voltage	DC 12V
Input Current	0.3A
Rated Power	4W
POE	Standard802.3AF
General Specifications	
Use Environment	Indoor
Operating Temperature	0°C~40°C
Storage Temperature	-10°C~50°C
Dimension	(W)354*(D)165*(H)67mm
Accessories	Power adapter*1, USB cable*1, User manual*1

Application Scenarios

Professional e-sports

Church Recording

Broadcast

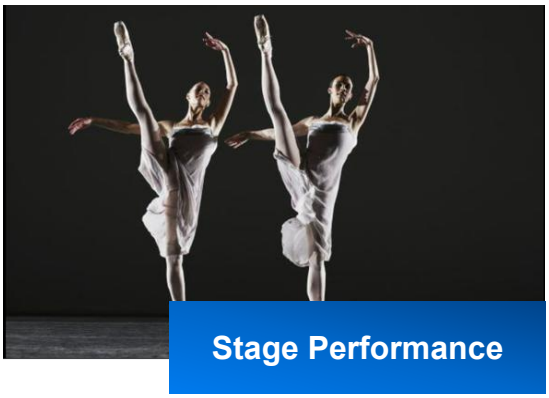

Stage Performance

Sporting Events

Academic Seminar

Dimension

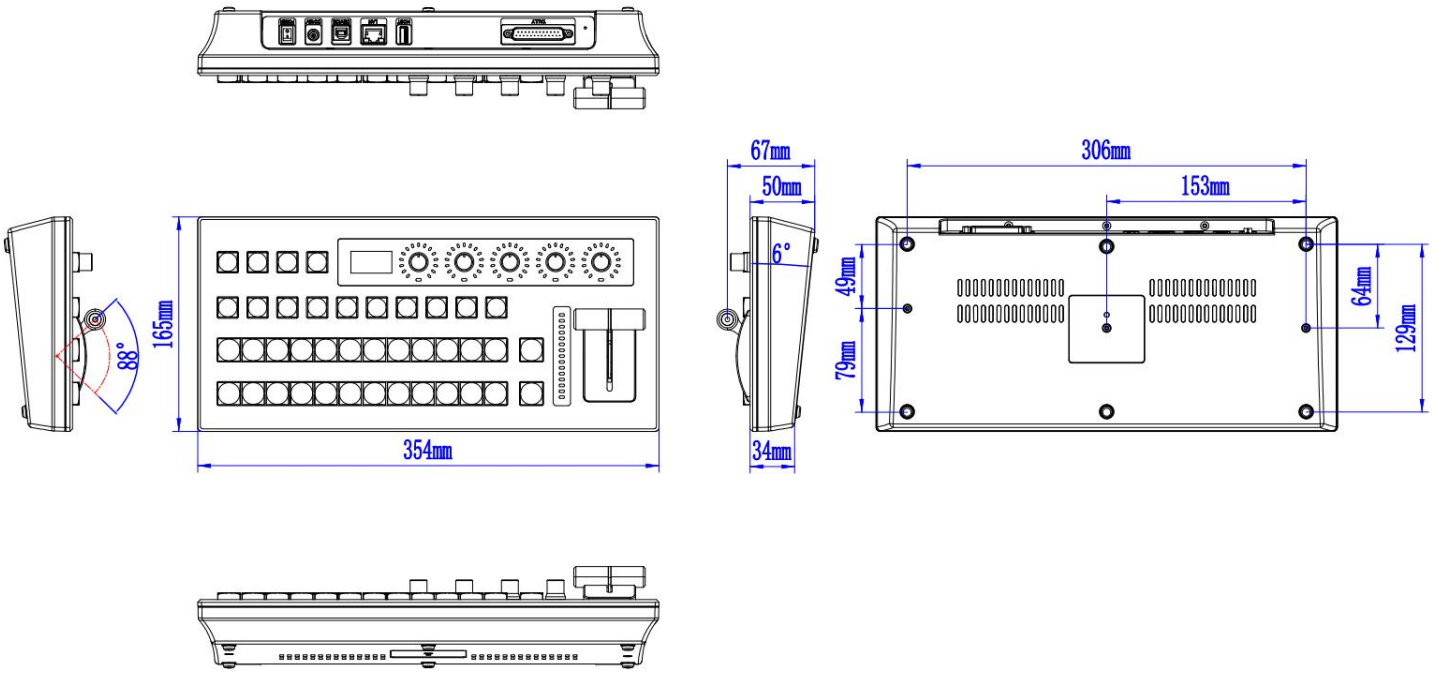
67mm
50mm
306mm
153mm
6°
49mm
64mm
129mm
79mm
88°
165mm
354mm
34mm